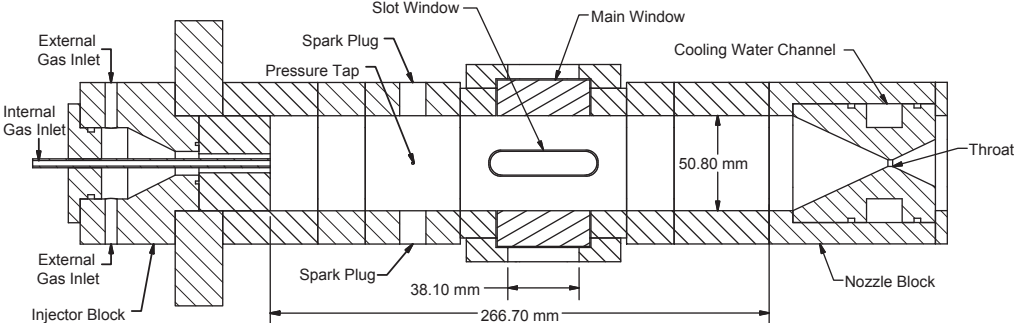
Slot Window
Main Window
External Gas Inlet
Spark Plug
Cooling Water Channel
Pressure Tap
Internal Gas Inlet
Throat
50.80 mm
External Gas Inlet
Spark Plug
Nozzle Block
38.10 mm
Injector Block
266.70 mm